COSMO 2/3

Technical Features

- Floodlight composed of two or three Led sources.
- Body and cover in die cast aluminium.
- Led COB technology (Chip On Board) placed on an highly thermical heat - dissipating plate.
- Cable plate complite with easy replaceable electronic unit.
- The power supply cable accesses the device through a PG16 cable glande (IP68).
- Opening provides access to reflectors and cable box in a single, easy step by using two solid stainless screws.
- Insulation class I.
- Overal protection degree IP66.

Upon Request

- Connection for operation on 230V-50/60Hz with dimmer dali or 1-10VDC ballast.

H07RN-F To ensure the degree of protection (sealing), the use of flexible power supply cable type HO7RN-F (in appropriate diameter) is required.

COSMO 2/3

COSMO 2

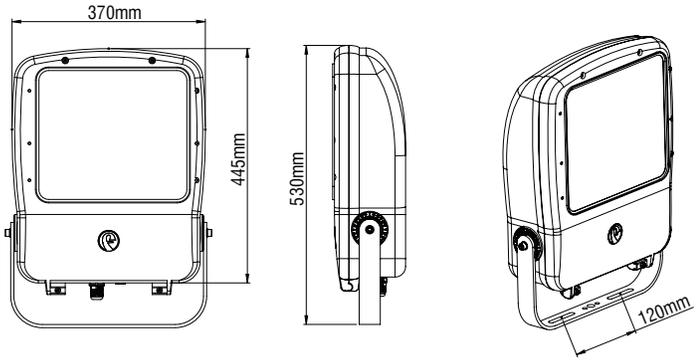

IP 66 | 850º C | IK 08 | LED

years 5 WARRANTY | ta 25ºC | Included

- Beams: Spot, Medium, Wide.
- Aluminium body.
- Tempered protection glass.
- Luminous Efficacy:
  110W: 5000 K: 171 Lm/W, CRI: min. 80
  110W: 4000 K: 170 Lm/W, CRI: min. 80
  110W: 3000 K: 162 Lm/W, CRI: min. 80

Code	Description
71701■■■	COSMO 2 LED 110W

For dimmer version add letter **"D"** at the end of product code.

COSMO 3

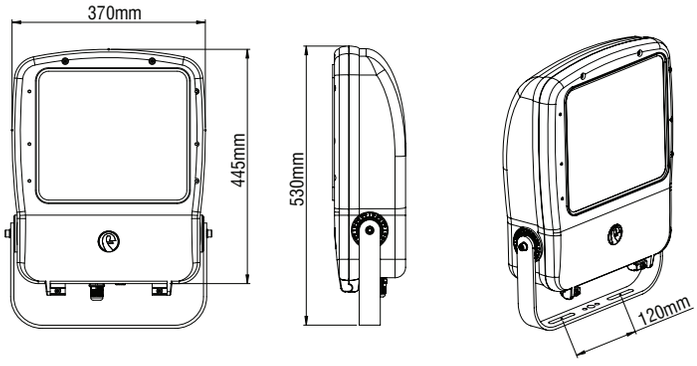

IP 66 | 850º C | IK 08 | LED

years 5 WARRANTY | ta 25ºC | Included

- Beams: Spot, Medium, Wide.
- Aluminium body.
- Tempered protection glass.
- Luminous Efficacy:
  127W: 5000 K: 172 Lm/W, CRI: min. 80
  127W: 4000 K: 171 Lm/W, CRI: min. 80
  127W: 3000 K: 163 Lm/W, CRI: min. 80

Code	Description
71702■■■	COSMO 3 LED 127W

For dimmer version add letter **"D"** at the end of product code.

LED COLOUR CODES: 1 Cool 2 Warm 3 Neutral

BEAM CODES: 01 spot 02 medium 03 wide

Colour Codes: 1 White 2 Titan 3 Black